Advanced/P2 Standard SMART - June 6, 2021 Judge: Katrina Parkinson / Designer: Roger Ly

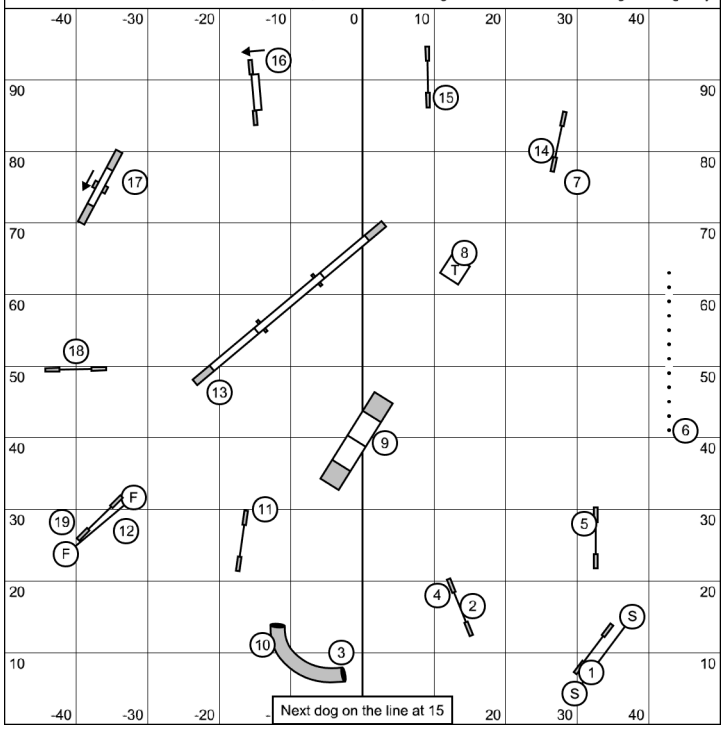

Advanced/P2 Gamblers SMART - June 6, 2021 Judge: Katrina Parkinson / Designer: Roger Ly

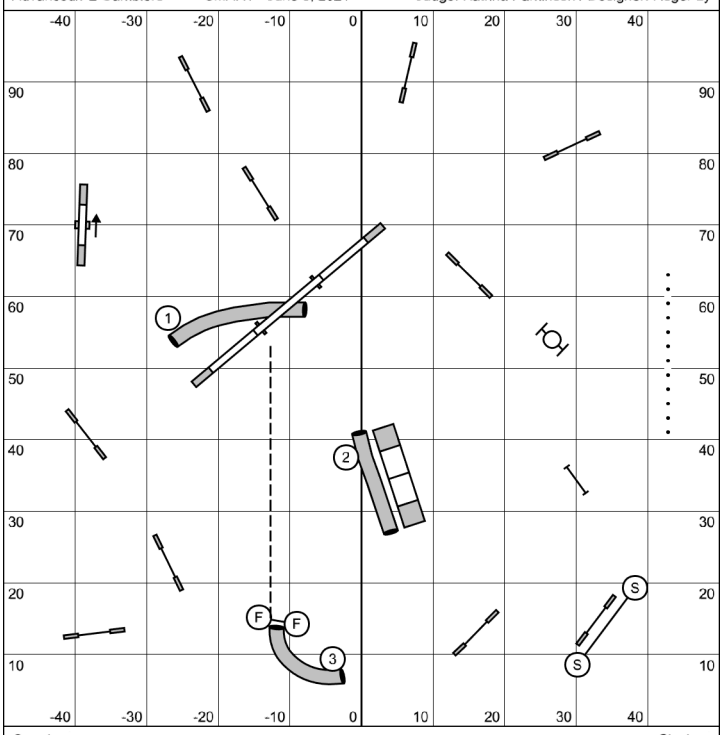

Opening:
1-3-5-7 Scoring System - Dogwalk is 7
30 seconds, 21 points required
Start jump is bidirectional

Each obstacle can be taken twice for points
Back-to-back is OK
Contact-to-contact is NOT OK

Closing:
CHAMPIONSHIP
20/22/24" - 14 seconds
14/16" - 15 seconds
10" - 16 seconds

PERFORMANCE
+2 second

Advanced/P2 Snooker SMART - June 6, 2021 Judge: Katrina Parkinson / Designer: Roger Ly

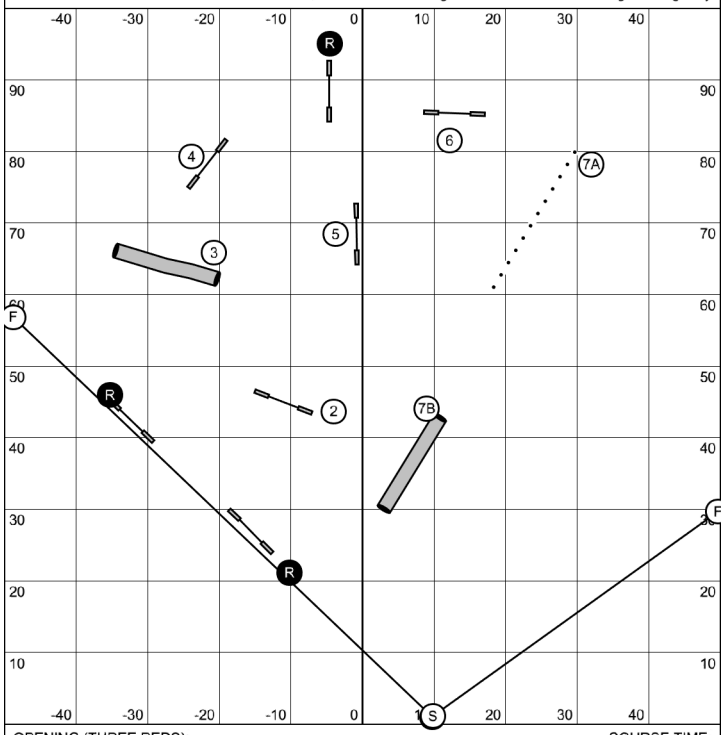

OPENING (THREE REDS):
Combinations may be taken in any order, any direction

Repeated obstacle during combination:
Complete combination for 0 points and continue

CLOSING:
#2 bidirectional, all other obstacles and combinations to be taken as marked

COURSE TIME:
CHAMPIONSHIP
20/22/24" - 52 seconds
14/16" - 54 seconds
10" - 56 seconds

PERFORMANCE
+2 second
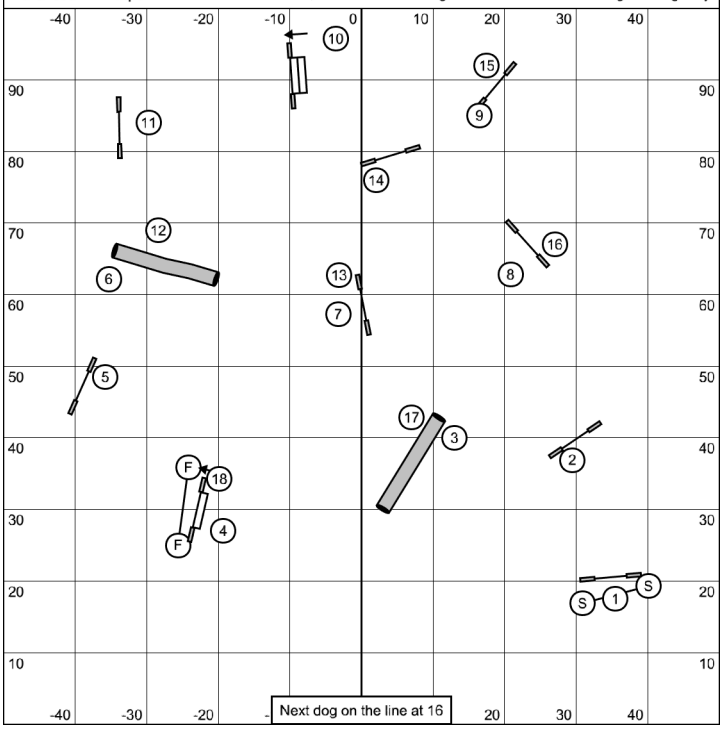
Advanced/P2 Jumpers SMART - June 6, 2021 Judge: Katrina Parkinson / Designer: Roger Ly